drukomat

Oil-Water-Separator for compressed air condensate

with activated charcoal filters for filtering condensate and exhaused air

Operating Instrucions
Check and Maitenance Book

Edition July 2011

drukomat **mini**
drukomat **1**
drukomat **2**
drukomat **4**
drukomat **8**
drukomat **15**
drukomat **30**
drukomat **61**

Installation was done

from user: _____

from company: _____

Day of Installation: _____

FUNCTIONS

1 ***Condensate feed is possible both under pressure and pressure-less:***
The condensate is feed from the compressor, the tank, or the dryer if possible with pressure.
(4 connections 1/2 inch)

2 ***Chamber for expansion and de-airation with filter from activated charcoal to filter the exhaust air***
The expansion and de-airation chamber assures a calm surface in the separator, even if the condensate is fed under pressure. The activated charcoal filter eliminates the oil from the exhaust air.

3 ***Settling and Floating Chamber***
This is where the mechanical separation of oil from water takes place.

4 ***Oil discharge***
The angle of draining / discharging the oil is adjustable.

5 ***Filtering***
Prefilter: Filter of knitted plastic fibres (PP) filtrers out the larger oil dropss, this relieving the activated charcoal filter
Charcoal filter: Filters out all the remaining oil droplets and guarantees the high overall efficiency.

6 ***Water discharge***
The remaining oil content of the water discharged is less than 10 mg/ltr. if the equipment ic correctly dimensioned. This water can be discharged directly into the sewers.

7 ***Test valve***
The test valve permits very simply to take discharge-water samples.

8 ***Heating (auxilliary equipment)***
Thermostatically controlled heaters are available for outdoor installation.

9 ***Oil-collect tank with overflow safe-guard***

10 ***Testset***
Check-glass and oil-test paper.
See Check and Maintenance Book.

11 ***Document compartment***
Operating Instructions as well as the Check- and Maintenance Book are at your fingertips at all times.

floating diagram druko***mat*** **mini,1,2,4,8,15**

Prefilter is standard from druko***mat*** **15**

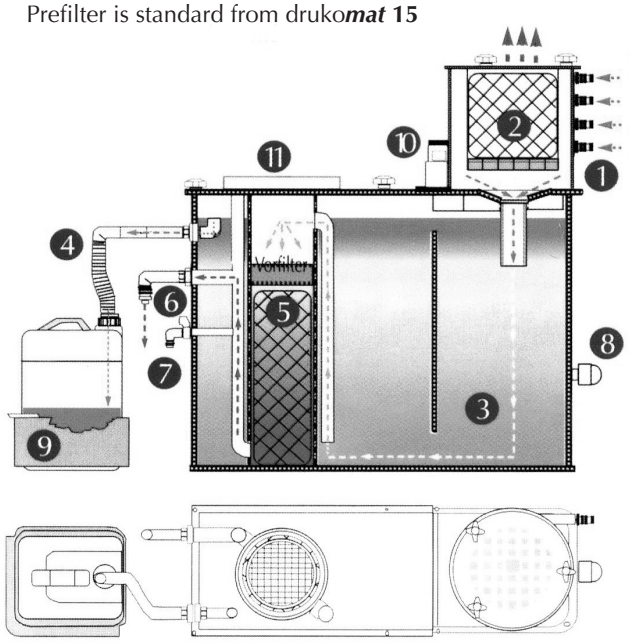

floating diagram druko***mat*** **30,61**

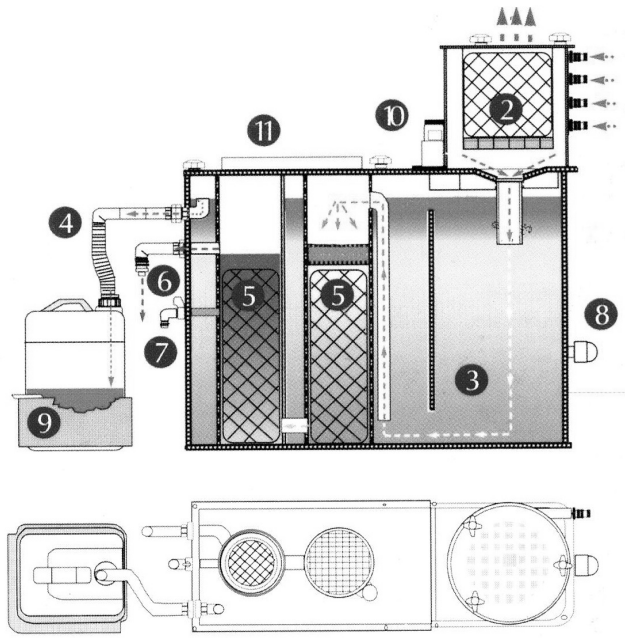

TECHNICAL DATA

Type druko*mat*	compes-sor capacity up to * m³/min	volume of con-tainer Liter	dimensions (mm) A	B	C	weight kg	conden-sate input (thread in inches)	water drain (thread in inches)	oil drain (thread in inches)	filtering: pre-filter kg	charcoalfilter: water kg	charcoalfilter: exh. air kg
2	2,4	40	908	437	325	15	4 x 1/2"	1"	1"	–	1 x 3,8	1 x 1,5
4	4	74	965	600	380	22	4 x 1/2"	1"	1"	–	1 x 3,8	1 x 1,5
8	8	120	965	620	520	25	4 x 1/2"	1"	1"	–	1 x 3,8	1 x 1,5
15	15	160	1160	620	520	28	4 x 1/2"	1"	1"	1 x 0,3	1 x 3,8	1 x 1,5
30	30	230	1160	850	520	55	4 x 1/2"	1"	1"	1 x 0,3	2 x 3,8	1 x 1,5
61	70	790	1450	1300	1000	90	4 x 1/2"	2"	2"	2 x 0,3	4 x 3,8	1 x 1,5

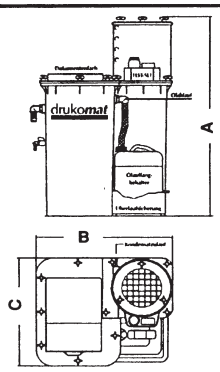

* Capacity valid for srew compressors using non-emulsifying oils. When using other types of compressors and other types of compressor oils, these figures have to be reduced (See Maintenance Book). ***1 m³/min = 35,3 cfm**

Place of installation: Clean and freeze-proof on a **flat horizontal place** - not in direct sunlight

Input of condensate: The condensate can be fed with or without pressure.

Connections:

	druko*mat* **mini**	druko*mat* **1** bis **30**	druko*mat* **61**
Condensate inlet:	3x 1/2“	4x 1/2“	4x 1/2“
Oil discharge:		1x 1“	1x NW32
Water outlet:	1x 1“	1x 1“	1x NW32

Important: The hose connectors at the condensate inlets are expansion nozzles and must not be removed, when condensate is fed with pressure. When condensate is fed without pressure, these nozzles should be replaced by connectors customary in the trade.

Start-up: Unscrew the lid, fill the device with water until water runs out of the water outlet. Press down the activated charcoal filter. The water inlet into the filter room has to be free. Screw the lid back on. The druko*mat* is now ready for operation.

Condensate flow rate: Depending on the type of compressor and the type of oil used in the compressor. For further technical informations see page 5.
The condensate must be fed continously. Any sporadic input of large quantities (eg. when emptying the tank by hand) should be avoided.

Operation: In the main chambers, which are accessible after the removal of the lid, there is a moveable 90° elbow for the oil output. Depending on the density of the oil, an oilfilm of different thickness builds up. A very light oil causes a „high oil level“, the 90° bend of the tab should then be upright.
The heavier the oil, the more the tab has to be bent sideways, but only so far that no water will run out of the outlet. **This adjustment can only be done after a certain time of operation, as the oilfilm takes time to build up!**

Notice: The druko*mat* mini has got no oil-discharge. The separated oil is collected in the combi-filter and has to be disposed with the filter !

Waste oil: The waste oil flows out through tube to which an oil drain hose will be connected, leading to an oil-container.

Clean condensate: The discharging clean condensate flows out through tube. The water drain hose must be connected with down slope to sewage system.

Checking: The discharging condensate has to be checked regularly and the activated charcoal filter has to be exchanged in due time (depending on the load every 2-3 months) to ensure a perfect function of the equipment.
(further details see also Test and Service Log)

IMPORTANT: If condensate comes out of the oil discharge, are the filter saturated or the separator is overloaded (not at druko*mat* **mini**).

Filtering: **Only original spare-filters guarantee proper operation of the separator !**

Combi-filter: The models druko*mat* **mini** and druko*mat* **1** are equipped with a combi-filter - type 1085W. This filter-type is a combination of coalescence- (pre-filter) and activated charcoal-filter.

Pre-filter: A pre-filter (type 1094VF) is installed up from model druko*mat* **15**. This filter consists of a plastic knit (PP-threads). This special construction provides, that very small oil-drops getting to larger-drops, which are then bound by the fibrous tissue.

Activated charcoal-filter: We use a special activated carbon, which has a large internal surface area and there fore it is particularly suitable to remove the oil from water.
The high purificationlevel is only warranted when using this type of charcoal.

Change of the filters: Unsrew the lid. Remove old filters carefully from the chamber. Clean inlet and filter chamber, insert the new watered filters.

Fill the filterroom up with clean water until it water runs out of the water outlet, press the filter down! The filter should be completely under water!
If neccessary take oil and cracked oil from the surface of the main chamber!

The activated charcoal filter in the exhaust air chamber can be exchanged after the removal of the lid.

Notice: We recommend you to put the new charcoalfilter several hours in clean water before it is placed into the filterroom of the separator. By watering the the charcoalfilter- air removed out of the capilars of the charcoal and therefor the filter is immediately active!

Change of pre-filter: (up from druko*mat* **15**) Always together with the coal filter. When the coal filter is installed press the pre-filter on the coal filter! Screw the lid back on. The device is ready for operation again!

Spare-filters:

	druko*mat* **mini, 1**	druko*mat* **2,4,8**	druko*mat* **15**	druko*mat* **30**	druko*mat* **61**
Pre-filter:	-	-	1x1094VF	1x1094VF	1x4/1094VF
Activ.coal-filter					
for exhaust-air (2)	1x1088L	1x1088L	1x1088L	1x1088L	1x1088L
for water (5)	1x1085W	1x1087W	1x1087W	2x1087W	4x1087W

Checking of the dischrgeding water: (see also Test and Service Log)

A test sample can be taken from the test valve. The water must be clean and clear. If the water is turbid the activated coal filter has to be exchanged.

Notice: After the initial operation we recommend to take test samples in regular intervals, eg. every week. Changing appearance of the samples indicate the remaining service life of the filter. This is an easy way for you, to ascertain in your particular case how often the filters have to be checked and when they have to be replaced.

You can have the discharging water analysed as its remaining oil content. Such analysis are carried out by the Municipal Servicesor any licenced labato ry.For such an analysis the labatories need a test sample in a 1 ltr. glass bottle. We can also this analysis for you for modert charge.
We then need the following information:

- 1 ltr. test sample in a glass bottle
- type of compressor used
- compressor size and work load

Disposal: The waste oil and the saturated filters have to be disposed of according to the regulations. Please get in contact with a disposal company in your area.

Enclosures: Test- and Service Log

Capacity of druko*mat* mini,-1,-2,-4,-8,-15,-30,-61
in m³/min of installed compressor capacity

Compressortype	Screw Compressor								Rotary Vane Compressor (oil flooded)								Piston Compressor (1 and 2 stage)							
druko*mat*	mini	1	2	4	8	15	30	61	mini	1	2	4	8	15	30	61	mini	1	2	4	8	15	30	61
non-emulsifying oil	1,2	2	3	5	8	15	30	70	1,2	2	3	4	8	10	25	60	0,6	1	1,5	2	3	5	10	30

Note:

1) The capacity above are maximum figures !

2) Reduce capacity when the installation-place is difficult (warm and or dusty ambient conditions)

3) Divide capacity by 2 for condensate delivered through timed solonoid drains!

4) A heating improof the function of the drukomat and allows installation in freezing ambient!

5) 1 m³/min = 35,3 cfm

Technical information on the oil-water-separator drukomat

From time to time problems occur which require a more detailed knowledge of the devise.
Here are some informations and rules which help you.

Operating instruction

Please read the instruction carefully, especially the paragraph “condensate flow rate“ and be sure to comply with it. The condensate should be fed automatically, if possible; input under pressure is possible by means of the expansion nozzle the devise is equipped with.

Influence of the compressor on the efficiency:

In the past compressor oils were only chosen to suit the compressor. The problem of the condensate disposal was hardly considered or completely neglected. This is one reason why many companies still use compressor oils which emulsify strongly with water and some of which form stable emulsion.

Consiquence:

The condensate is turbid and remains so even after fairly long settling time. Under certain conditions it even builds up a solid foam, which swims on the water surface and prevents the function of the separator (outlet and coal choke up).

Such condensates can´t be separated by the drukomat system.
The same applies to other separators which operate on the same principle.

When it is unused, the activated coal filter absorbs some of the oil from the emulsion, but it is quickly saturated (after a few days or hours) and thus ineffective. The coal chokes up, the condensate level rises and the condensate flows out through the oil outlet. Therefor, these emulsions have to be collected and properly disposed of.

Important!:

In order to prevent the condensate from emulsifying a **non-emulsifying compressor oil** has to be used. These oils are being offered by almost every oil producer. Please contact your compressor and oil producer for more information on the type of oil to be used.

Non-emulsifying compressor oils can be separated from water by the drukomat
with the known efficiency. Moreover, the service life of activated coal filter is prolonged.

When is the activated coal filter saturated ?

The service life of a filter depends on many factors such as type of compressor, type of oil, amount of condensate, temperature of condensate etc. It can´t be determined in advance for individual applications. We recommend to visually control the discharging condensate regularly and not to exchange the activated coal filter if neccessary.

If water runs out of the oil outlet, it is clear sign that the coal filter is saturated,
providing all the other operating conditions are normal.

Final conclusion:

Adequate operating conditions (type of oil, amount of condensate, maintenance) are a must for a proper functioning of the device. It is thus important to inform the operator about the way the device works, eg the importance of the choice of the right type of oil, etc.
There is no technical disadvantage for the compressors, if right non-emulsifying oils are being used.